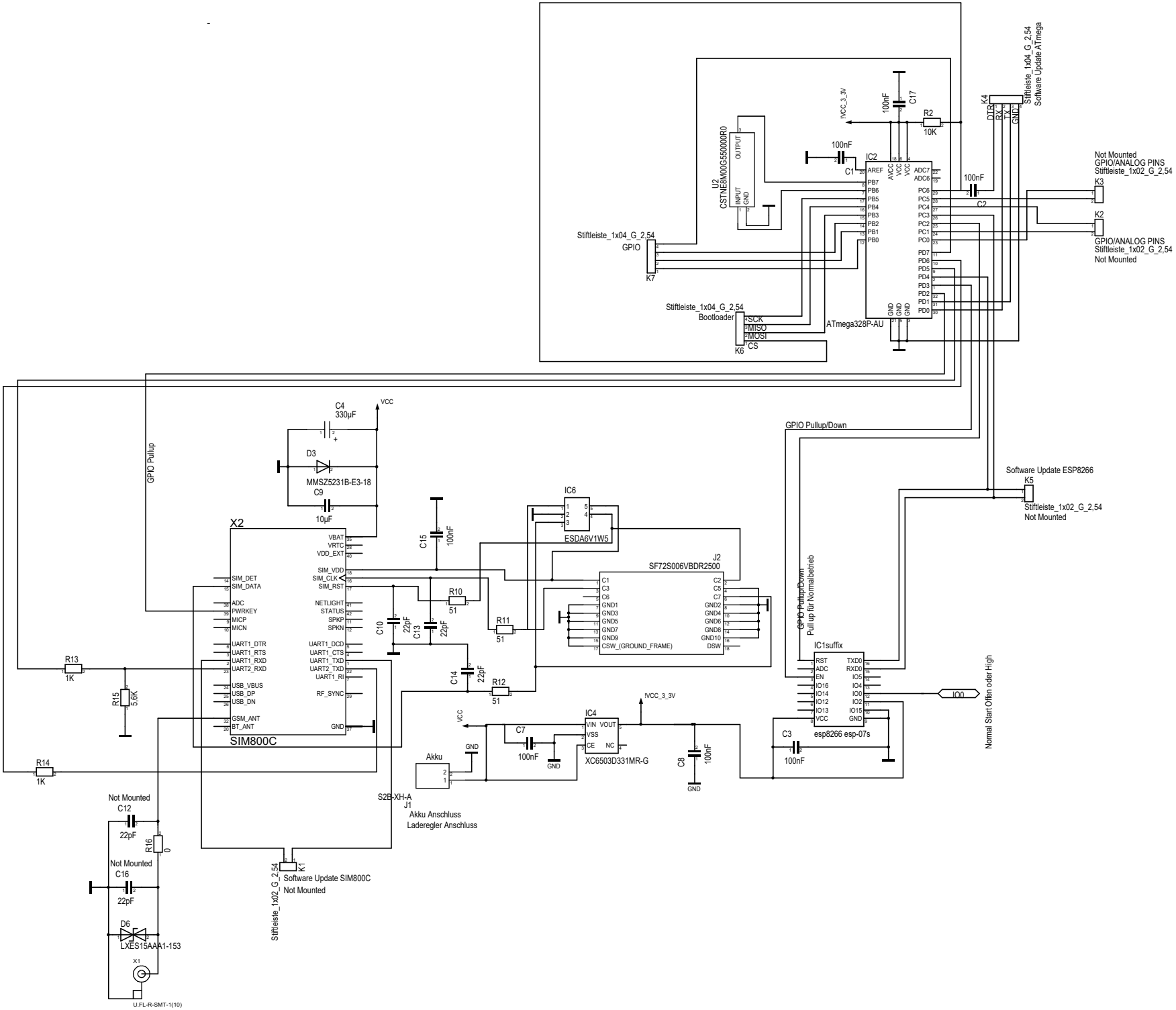
Stiftleiste_1x04_G_2,54
Software Update ATmega
K4
DTR
RX
TX
GND
!VCC_3_3V
C17
100nF
R2
10K
IC2
ATmega328P-AU
AREF
AVCC
VCC
ADC7
ADC6
PB7
PB6
PB5
PB4
PB3
PB2
PB1
PB0
PC6
PC5
PC4
PC3
PC2
PC1
PC0
PD7
PD6
PD5
PD4
PD3
PD2
PD1
PD0
U2
CSTNE8M00G550000R0
OUTPUT
INPUT
GND
C1
C2
Not Mounted
GPIO/ANALOG PINS
Stiftleiste_1x02_G_2,54
K3
K2
GPIO/ANALOG PINS
Stiftleiste_1x02_G_2,54
Not Mounted
Stiftleiste_1x04_G_2,54
GPIO
K7
Stiftleiste_1x04_G_2,54
Bootloader
SCK
MISO
MOSI
CS
K6
GPIO Pullup
C4
330µF
VCC
D3
MMSZ5231B-E3-18
C9
10µF
X2
VBAT
VRTC
VDD_EXT
SIM_VDD
SIM_CLK
SIM_RST
SIM_DET
SIM_DATA
ADC
PWRKEY
MICP
MICN
NETLIGHT
STATUS
SPKP
SPKN
UART1_DTR
UART1_RTS
UART1_RXD
UART2_RXD
UART1_DCD
UART1_CTS
UART1_TXD
UART2_TXD
UART1_RI
USB_VBUS
USB_DP
USB_DN
RF_SYNC
GSM_ANT
BT_ANT
GND
SIM800C
C15
100nF
IC6
ESDA6V1W5
J2
SF72S006VBDR2500
C1
C3
C6
GND1
GND3
GND5
GND7
GND9
CSW_(GROUND_FRAME)
C2
C5
C7
GND2
GND4
GND6
GND8
GND10
DSW
R10
51
R11
51
R12
51
C10
22pF
C13
22pF
C14
22pF
R13
1K
R15
5,6K
R14
1K
GPIO Pullup/Down
Pull up für Normalbetrieb
IC1suffix
RST
ADC
EN
IO16
IO14
IO12
IO13
VCC
TXD0
RXD0
IO5
IO4
IO0
IO2
IO15
GND
esp8266 esp-07s
C3
100nF
IO0
Normal Start Offen oder High
Software Update ESP8266
K5
Stiftleiste_1x02_G_2,54
Not Mounted
IC4
VIN
VOUT
VSS
CE
NC
XC6503D331MR-G
C7
100nF
C8
100nF
Akku
S2B-XH-A
J1
Akku Anschluss
Laderegler Anschluss
Not Mounted
C12
22pF
R16
0
Not Mounted
C16
22pF
D6
LXES15AAA1-153
X1
U.FL-R-SMT-1(10)
K1
Software Update SIM800C
Not Mounted
Stiftleiste_1x02_G_2,54